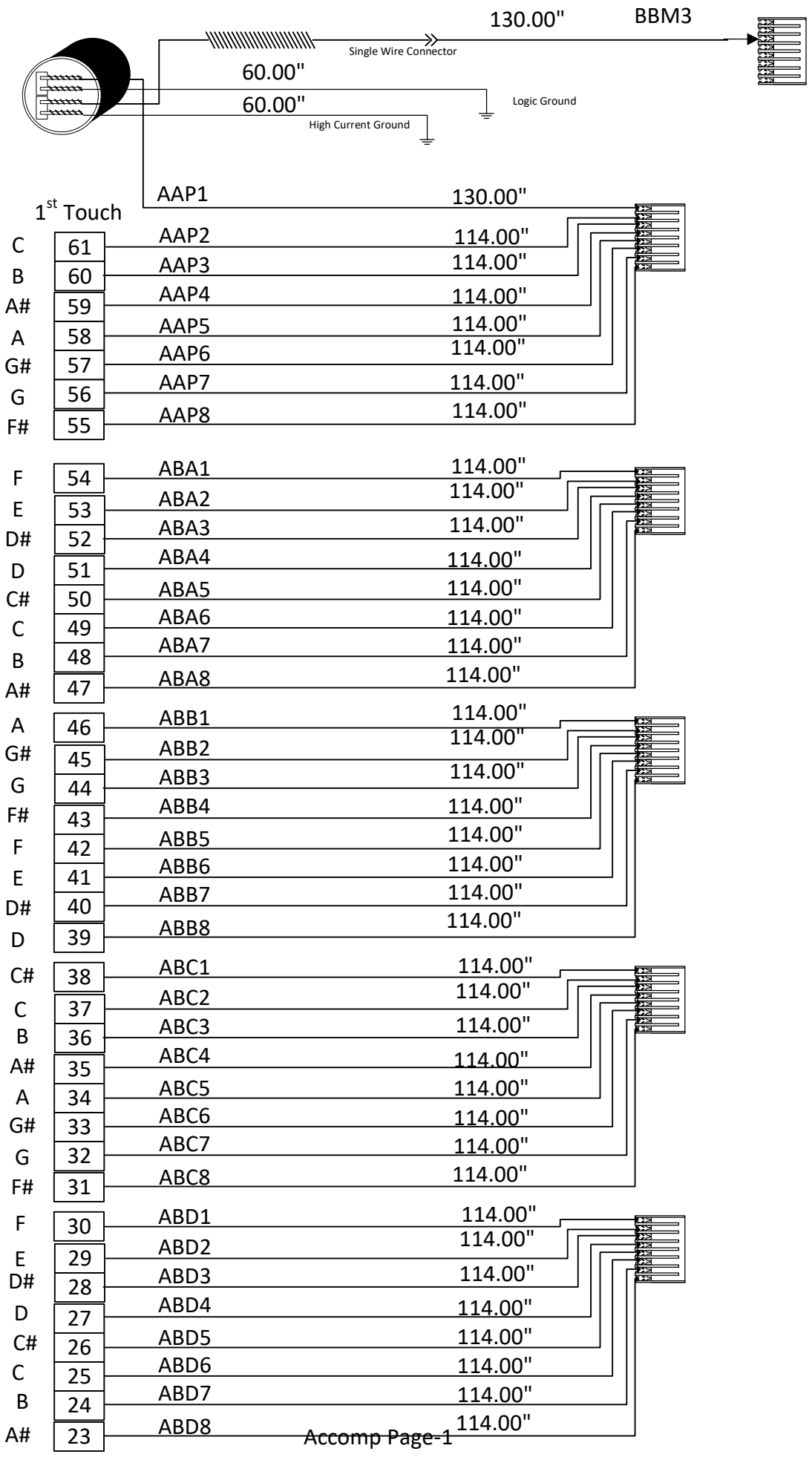
130.00"
BBM3
Single Wire Connector
60.00"
Logic Ground
60.00"
High Current Ground
1st Touch
C 61 AAP2 114.00"
B 60 AAP3 114.00"
A# 59 AAP4 114.00"
A 58 AAP5 114.00"
G# 57 AAP6 114.00"
G 56 AAP7 114.00"
F# 55 AAP8 114.00"
F 54 ABA1 114.00"
E 53 ABA2 114.00"
D# 52 ABA3 114.00"
D 51 ABA4 114.00"
C# 50 ABA5 114.00"
C 49 ABA6 114.00"
B 48 ABA7 114.00"
A# 47 ABA8 114.00"
A 46 ABB1 114.00"
G# 45 ABB2 114.00"
G 44 ABB3 114.00"
F# 43 ABB4 114.00"
F 42 ABB5 114.00"
E 41 ABB6 114.00"
D# 40 ABB7 114.00"
D 39 ABB8 114.00"
C# 38 ABC1 114.00"
C 37 ABC2 114.00"
B 36 ABC3 114.00"
A# 35 ABC4 114.00"
A 34 ABC5 114.00"
G# 33 ABC6 114.00"
G 32 ABC7 114.00"
F# 31 ABC8 114.00"
F 30 ABD1 114.00"
E 29 ABD2 114.00"
D# 28 ABD3 114.00"
D 27 ABD4 114.00"
C# 26 ABD5 114.00"
C 25 ABD6 114.00"
B 24 ABD7 114.00"
A# 23 ABD8 114.00"

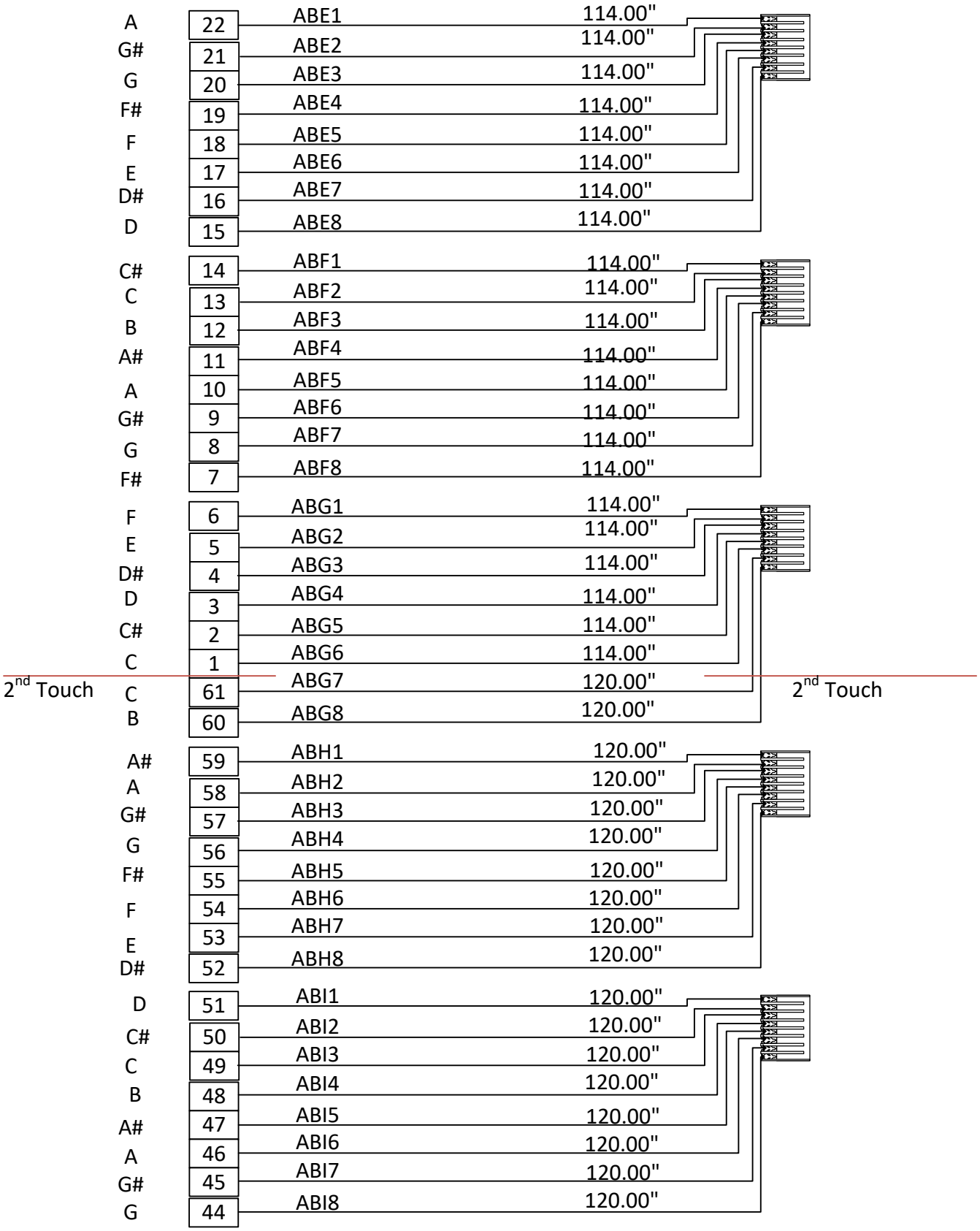
A 22 ABE1 114.00"
G# 21 ABE2 114.00"
G 20 ABE3 114.00"
F# 19 ABE4 114.00"
F 18 ABE5 114.00"
E 17 ABE6 114.00"
D# 16 ABE7 114.00"
D 15 ABE8 114.00"
C# 14 ABF1 114.00"
C 13 ABF2 114.00"
B 12 ABF3 114.00"
A# 11 ABF4 114.00"
A 10 ABF5 114.00"
G# 9 ABF6 114.00"
G 8 ABF7 114.00"
F# 7 ABF8 114.00"
F 6 ABG1 114.00"
E 5 ABG2 114.00"
D# 4 ABG3 114.00"
D 3 ABG4 114.00"
C# 2 ABG5 114.00"
C 1 ABG6 114.00"
2nd Touch
C 61 ABG7 120.00"
2nd Touch
B 60 ABG8 120.00"
A# 59 ABH1 120.00"
A 58 ABH2 120.00"
G# 57 ABH3 120.00"
G 56 ABH4 120.00"
F# 55 ABH5 120.00"
F 54 ABH6 120.00"
E 53 ABH7 120.00"
D# 52 ABH8 120.00"
D 51 ABI1 120.00"
C# 50 ABI2 120.00"
C 49 ABI3 120.00"
B 48 ABI4 120.00"
A# 47 ABI5 120.00"
A 46 ABI6 120.00"
G# 45 ABI7 120.00"
G 44 ABI8 120.00"
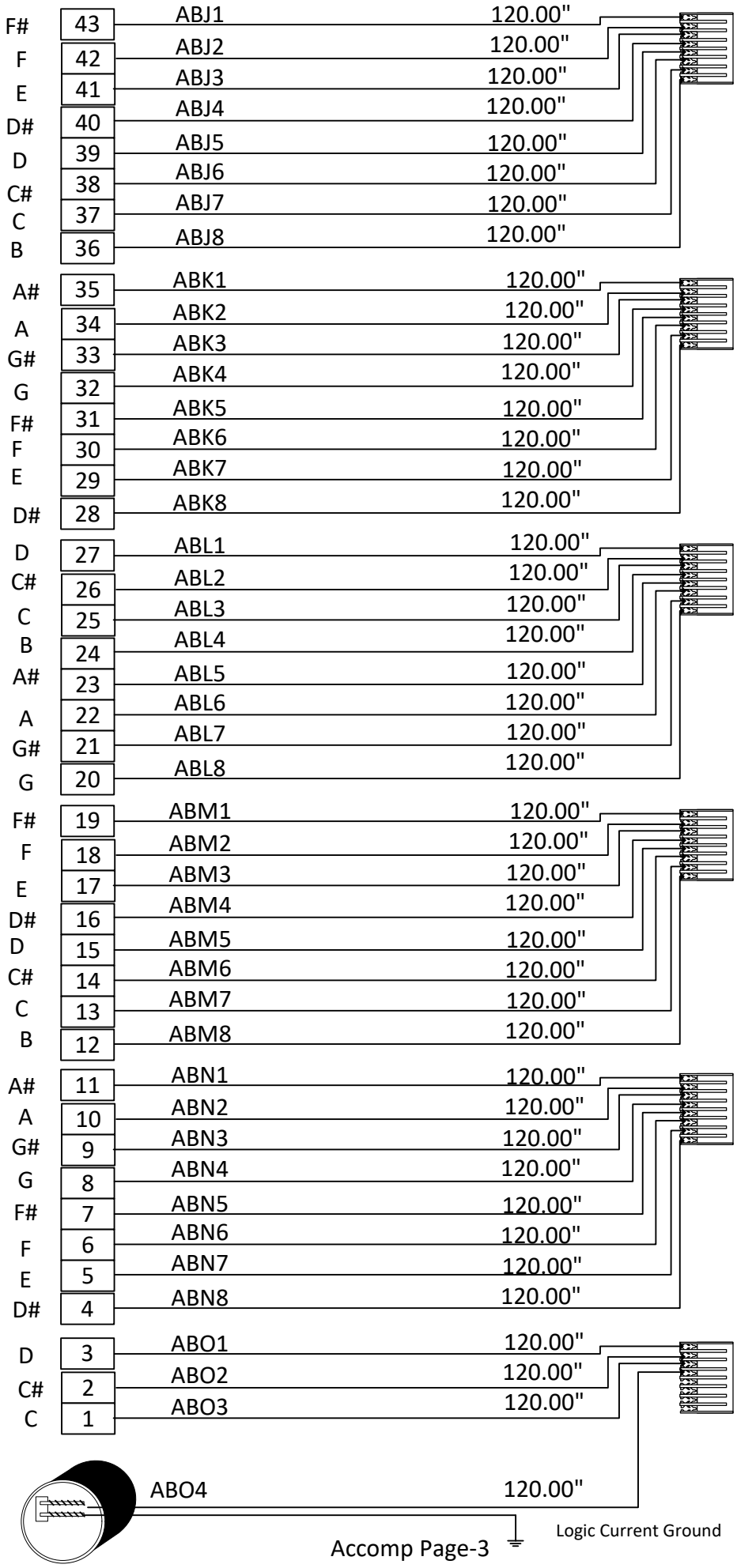
Accomp Keyboard Wiring